ABG 7820L

ASPHALT PAVERS TRACKED

CHINA 4



ABG puts you in control

- EPM3 with intuitive layout and a jog-wheel for quick function settings
- Consistent, high-quality paving; transfer data from job-to-job with the Settings Manager
- High paving performance at remarkably low noise levels with adaptive Eco Mode
- Unhampered visibility around the paver
- Illuminated Ammann screed panels with a large, coloured display

Long-lasting paving performance

- Volvo (Deutz) China 4 engine offers unrivalled durability and performance
- Powertrain components are perfectly harmonised for high efficiency
- A variety of features support a faultless finish, e.g., automatic track tensioning, screed load, screed tensioning device
- Efficient cooling system with hydraulically powered adaptive cooling fan
- Extra-long hopper for extra-large trucks

Supreme screed technology

- Range of industry-leading screeds up to 11-meter paving width
- Quickly add or remove Variomatic screed extensions with the quick-coupling system*
- Simple assembly of weight optimised guide plates by one person
- Dual heating bar arrangement ensures uniform heat distribution over the entire screed
- ABG's specially-designed tamper bars are fully hardened for lasting durability
- Double tamper screeds offer the highest levels of pre-compaction density behind the screed

Keep on working

- Service access from the platform provides ease of maintenance
- Service Interval Manager notifies the operator of required maintenance
- Connected services with PSR telematic hardware
- Maintain productivity and machine uptime with approved Genuine ABG Parts
- ABG service kits save time, lower costs and offer the latest technical advantages

AN ABG EXCLUSIVE FEATURE

AMMANN

ABG 7820L

China 4

ENGINE		ABG 7820L
MANUFACTURER		Volvo (Deutz)
MODEL		D8J
FUEL		Diesel
OUTPUT	kW	175
	hp	237
AT ENGINE SPEED	r/min	1 800
COOLANT		Liquid
FUEL TANK CAPACITY	l	250
EXHAUST EMISSION		China 4

PAVING		
OUTPUT (THEORETICAL)*	t/h	900
MAT THICKNESS (MAX)	mm	300

**The actual paving output depends upon the mat thickness, the paving width and paving speed and will vary according to paving conditions prevailing on your jobsite.*

SPEED		
PAVING (MAX)	m/min	20
TRANSPORT (MAX)	km/h	3.6

UNDERCARRIAGE		
LENGTH	mm	3 000
WIDTH (TRACK PLATES)	mm	300

CONVEYOR		
HOPPER CAPACITY	t	15.5
NUMBER OF CONVEYORS		2
CONVEYOR SPEED (MAX)	m/min	23

AUGER		
SPEED (MAX)	1/min	95
DIAMETER	mm	360

DIMENSIONS		ABG 7820L
LENGTH WITH VARIO SCREED (WALKWAY UP)	mm	6 452
WIDTH	mm	2 548
HEIGHT	mm	3 780
HEIGHT (TRANSPORT)	mm	2 910

WEIGHT		
TRACTOR UNIT	kg	15 440

All weights are approx. weights without options.
Weight of tractor without screed, with standard hopper, with fuel tank half full, with towing arms separated, with push roller D=110 mm, and incl. 75 kg driver.

MAX. ALLOWABLE GRADEABILITY		
TRACTOR UNIT + SCREED	%	25

Applies to screed VB 78 2.5-5.0 m.
When using extensions the max. allowable gradeability will be reduced.

SOUND LEVEL		
L_{pA} *Sound Pressure Level at Driver's Ear, according to ISO 11201*	dB	83
L_{WA} *Guaranteed Sound Power Level, according to Directive 2000/14/EC*	dB	105

ELECTRICAL SYSTEM		
BATTERY VOLTAGE	V	24

OPERATING WEIGHTS[1] OF SCREEDS IN KG[2] AT WORKING WIDTH

ABG 7820L	2.5 m	5 m	6 m	6.5 m	7.5 m	8 m	8.5 m	9 m	9 m (V)	10 m	11 m
VB 78 ETC	-	3 600	-	5 222	5 802	6 342	-	6 923	-	-	-
VDT-V 78 ETC	-	3 850	-	5 592	6 192	6 832	-	7 433	-	-	-
VB 88 ETC	-	-	4 050	-	5 772	-	6 352	6 892	-	-	-
VDT-V 88 ETC	-	-	4 450	-	6 242	-	6 842	7 482	-	-	-
MB 122 ETC	2 242	-	4 456	-	6 076	-	-	6 828	7 454	8 050	8 575
VDT 121 ETC	2 442	-	4 903	-	6 680	-	-	7 531	8 193	-	-

[1] *Including auger extensions, channel plates, end gates, towing arms rear, etc.*
[2] *All screeds electrically heated*

TRACKED ASPHALT PAVERS

DIMENSIONS [mm]		ABG 7820L
A	STANDARD	6 452
B		3 000
C		250
D		275
E		265
F		360 ± 60
G		2 385
G_1		2 557
H		398
I		1 385
J		600
K		160
L		435
M		770
N		318
O		1 615
P		1 025
Q	UP	3 780
	DOWN	2 910
R	OPEN	3 257
	CLOSED	2 452
S		3 176
T		2 495
U		300
V		2 269
W		438
X		1 280
Y		2 500
Z		5 000

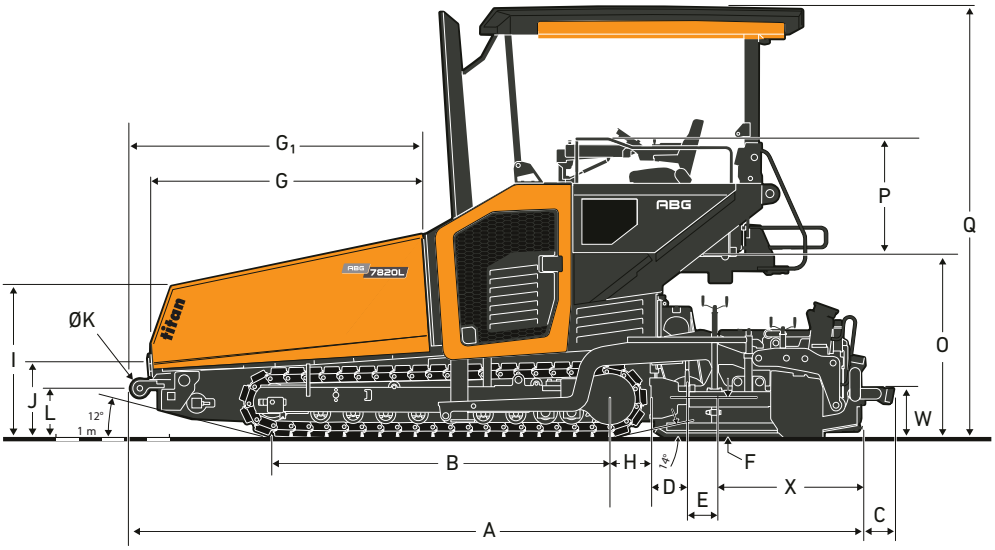

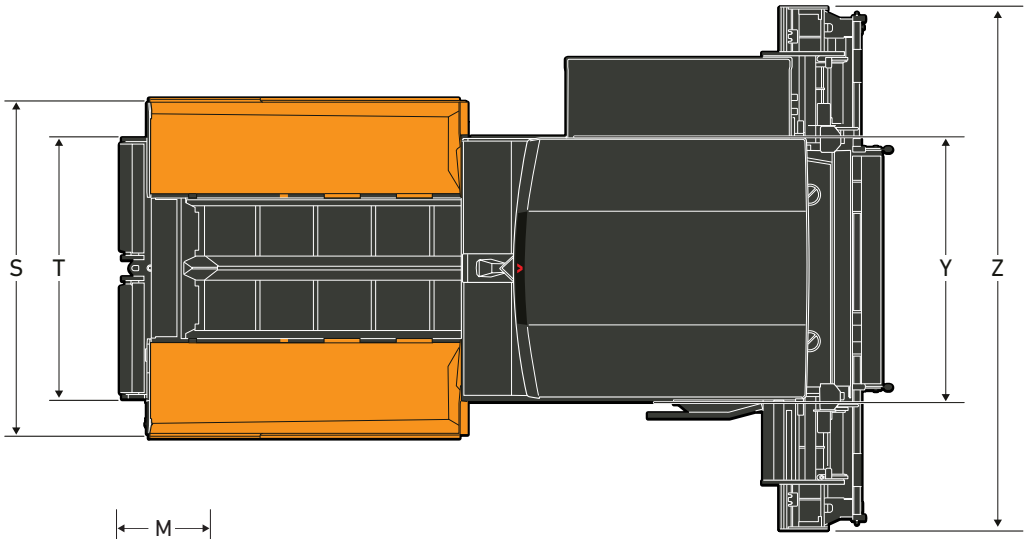

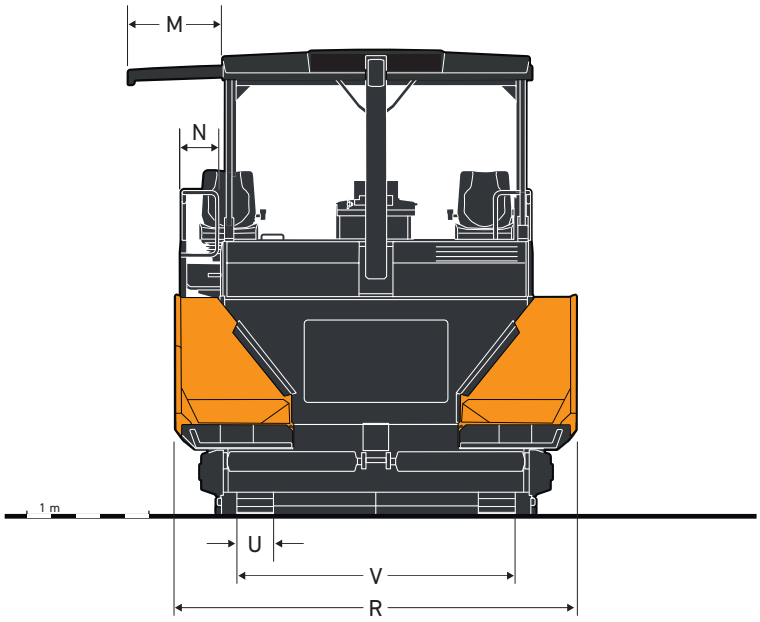

AMMANN

EQUIPMENT

STANDARD EQUIPMENT

Engine

- Volvo (Deutz) Diesel engine, China 4

Drive

- Electronic drive control
- Lifetime lubricated crawler track rollers
- Forged and hardened crawler track links
- Automatic track tensioner

Material management

- Proportional conveyor sensors
- Four individual hydrostatic drives for conveyors and augers
- Reversible direction of auger rotation
- Hydraulic auger height adjustment
- Proportional ultrasonic sensor auger control
- Reversible conveyor
- Central lubrication

Electrics and electronics

- Electronic Paver Management (EPM 3)
- ECO mode
- Settings Manager
- Service Interval Manager
- Adjustable and revolving main control panel at operator platform
- Two adjustable and revolving screed control panels
- Battery master switch
- Electric switch cabinet
- MATRIS
- Generator for electric screed heating
- PSR telematics

Structure

- All-weather roof of GRP (glass-fibre reinforced plastic)
- Two seats, laterally extendable
- Anti-vandalism kit
- Near field mirrors at weather roof
- ABG Key

Screed

- Split towing arms
- Screed lock

Lights

- Six working lights Halogen at weather roof

Environmental

- Sound insulation

OPTIONAL EQUIPMENT

Material management

- Individual operating hopper wings
- Auger quick lock system
- Auger extensions and additional auger bearings

Electrics and electronics

- 230 V power sockets
- High ambient temperature fan
- On-board diagnostic function for manual screed heating bars
- Levelling equipment

Screed

- Screed spacer blocks
- Screed assist
- Screed anti-climbing lock
- Screed load device
- Screed tensioning device
- Hydraulic height Adjustment of Extendable Screed

Lights

- Warning beacons Halogen
- Two additional worklights Halogen at rear frame
- Two additional auger worklights Halogen at rear frame
- Platform light with home light function

Environmental

- High performance spray cleaning unit

For additional product information and services please visit: **www.ammann.com**
Materials and specification data are subject to change without notice.
MSS-3210-00-EN | © Ammann Group

AMMANN