ABG 6870

ASPHALT PAVERS WHEELED

CHINA 4



Versatile performer

- ABG 6x6 or 6x4 wheel drive system with superior traction
- Hydraulic self-levelling suspension system with three-point balance*
- Load dependent torque control prevents wheel spin
- Active steering for excellent manoeuvrability
- Large wheels for high drive force
- Travelling speed of up to 20 km/h

Powerful and efficient

- Powertrain components are perfectly harmonised for high efficiency
- Volvo (Deutz) China 4 engine offers unrivalled durability and performance
- Adaptive Eco Mode matches engine output to jobsite requirements
- Electronically adapted speed of the hydraulic cooling fan lowers noise and fuel consumption
- Grid power for heating the screed with e+ screed heat, no fuel + no CO_2

Paving made easy

- Intuitive Electronic Paver Manager system EPM3
- Integrated levelling equipment
- Hopper lock from the platform
- Settings Manager to store and save customised settings
- Pave Assist with Thermal Profiling, Weather view and Material Manager
- A very low noise level simplifies communication with the paving team

Ultimate screed performance

- Range of screeds to pave up to 9 meters
- VB 79 for all profiles, including special crown
- Quick-coupling for easy vario screed extension assembly*
- Fully hardened tamper bars significantly extend lifetime

The operator's choice

- A very low noise level simplifies communication with the paving team
- All-weather roof with sliding extensions
- Footrests, armrests, extendable seats
- Warm air outlet, cup holder, USB ports
- Unhampered visibility around the paver
- Glazed areas at the side of the platform
- Near-field mirrors
- Home light functionality for the platform light

Keep on working

- Service Interval Manager notifies the operator of required maintenance
- Ground level access to fuel tank, emulsion tank and AdBlue filler neck
- Central lubrication point, accessed from the platform
- CareTrack advanced telematics system
- Service access from the platform provides ease of maintenance
- MATRIS provides expert analysis of machine operating activity
- Care Kits: ensure optimum part performance and lifetime

**AN ABG EXCLUSIVE FEATURE*

AMMANN

ABG 6870

China 4

ENGINE		ABG 6870
MANUFACTURER		Volvo (Deutz)
MODEL		D6J
FUEL		Diesel
OUTPUT	kW	129
	hp	175.4
AT ENGINE SPEED	r/min	2 000
COOLANT		Liquid
FUEL TANK CAPACITY	l	200
EXHAUST EMISSION		China 4

PAVING		
OUTPUT (THEORETICAL)*	t/h	700
MAT THICKNESS (MAX)	mm	300

**The actual paving output depends upon the mat thickness, the paving width and paving speed and will vary according to paving conditions prevailing on your jobsite.*

SPEED		
PAVING (MAX)	m/min	40
TRANSPORT (MAX)	km/h	20

PROPULSION	
DRIVE UNITS REAR	2
DRIVE UNITS FRONT	4

WHEEL/TYRES

REAR WHEELS	
TYPE	Pneumatic tyres
NUMBER	2
DIMENSION	385/95R25

FRONT STEERING WHEELS		
TYPE		Elastic tyres
NUMBER		4
DIAMETER	mm	580
WIDTH	mm	340

CONVEYOR		
HOPPER CAPACITY	t	13
NUMBER OF CONVEYORS		2
CONVEYOR SPEED (MAX)	m/min	21.5

AUGER		
NUMBER OF AUGERS		2
SPEED (MAX)	1/min	90
DIAMETER	mm	360

DIMENSIONS		ABG 6870
LENGTH WITH VARIO SCREED (WALKWAY UP)	mm	6 152
LENGTH	mm	6 402
WIDTH	mm	2 548
HEIGHT	mm	3 837
HEIGHT (TRANSPORT)	mm	2 970

WEIGHT		
TRACTOR UNIT	kg	14 300

All weights are approx. weights without options.
Weight of the tractor: 75 kg operator, tyres filled with water, Diesel tank half-full and weather roof included.

MAX. ALLOWABLE GRADEABILITY		
TRACTOR UNIT + SCREED	%	25

Applies to screed VB 78 2.5-5.0 m.
When using extensions the max. allowable gradeability will be reduced.

SOUND LEVEL		
L_{pA} *Driver's ear, according to ISO 11201*	dB	84
L_{WA} *Guaranteed sound power level according to ISO 6395 / Directive 2000/14/EC*	dB	104

VIBRATION		
HAND-ARM VIBRATION *according to ISO 5349:2001*	m/s^2	<2.5
WHOLE BODY VIBRATION *according to ISO 2631:1997*	m/s^2	<0.5

ELECTRICAL SYSTEM		
BATTERY VOLTAGE	V	24

OPERATING WEIGHTS[1] OF SCREEDS IN KG[2] AT WORKING WIDTH

ABG 6870	5 m	6 m	6.5 m	7.5 m	8 m	8.5 m	9 m
VB 78 ETC	3 600	-	5 222	5 802	6 342	-	6 923
VB 79 ETC	4 050	-	5 672	5 252	-	-	-
VB 88 ETC	-	4 050	-	5 772	-	6 532	6 892
VB 89 ETC	-	4 450	-	6 222	-	-	-

[1] *Including auger extensions, channel plates, end gates, towing arms rear, etc.*
[2] *All screeds electrically heated*

WHEELED ASPHALT PAVERS

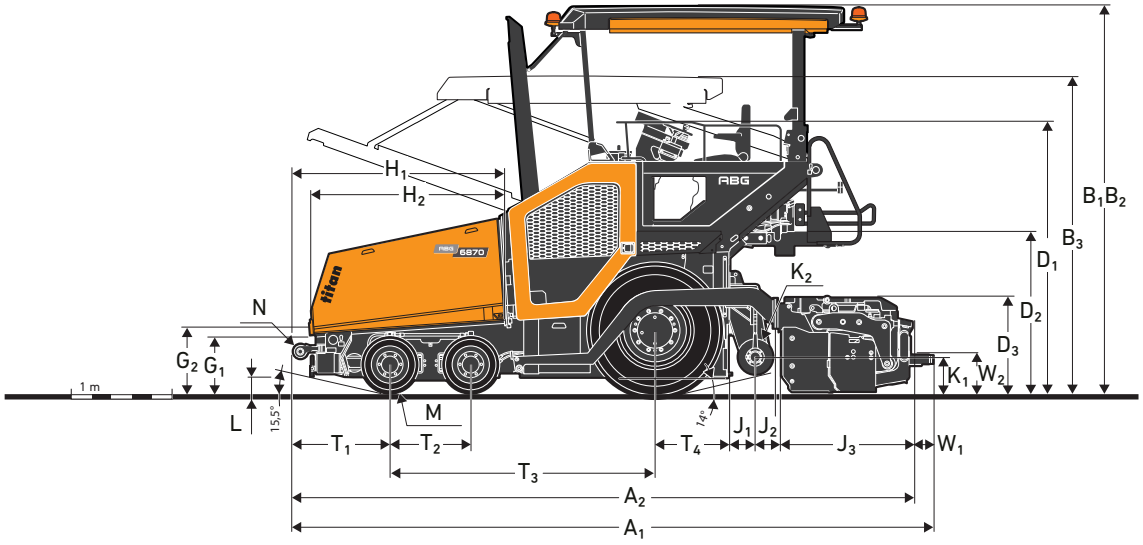

DIMENSIONS [mm]		ABG 6870
A_1	OPERATING LENGTH	6 402
A_2	SHIPPING LENGTH	6 152
B_1	OPERATING HEIGHT	3 837
B_2	HEIGHT WEATHER ROOF	3 837
B_3	SHIPPING HEIGHT	2 970
C	TRACTOR WIDTH	2 548
D_1	HEIGHT RAILING	2 700
D_2	DECK HEIGHT	1 605
D_3	SCREED HEIGHT	938
E_1	OUTER HOPPER WIDTH	3 256
E_2	INNER HOPPER WIDTH	3 176
E_3	WIDTH OSCILLATING BEAM	2 495
F_1	EXTENSION WEATHER ROOF	770
F_2	SEAT CONSOLE EXTENSION	317
G_1	INNER LOADING HEIGHT	592
G_2	OUTER LOADING HEIGHT	688
H_1	HOPPER LENGTH TO PUSH ROLLER	2 118
H_2	HOPPER LENGTH	1 939
J_1	DISTANCE REAR WALL AUGER CENTRE	275
J_2	DISTANCE AUGER CENTRE SCREED	265
J_3	SCREED DEPTH	1 297
K_1	AUGER HEIGHT TO GROUND (CENTER)	350–60
K_2	DIAMETER AUGER	360
L	GROUND CLEARANCE	145
M	DIAMETER WHEEL	540
N	DIAMETER PUSH ROLLER	160
O	CONVEYOR WIDTH	1 270
S_1	BASIC SCREED WIDTH VB78+VB79	2 500
	BASIC SCREED WIDTH VB88	3 000
S_2	EXTENDED SCREED WIDTH VB78+VB79	5 000
	EXTENDED SCREED WIDTH VB88	6 000
T_1	FRONT WHEEL/TRACK TO PUSH ROLLER	970
T_2	DISTANCE FRONT WHEELS	800
T_3	TRACK LENGTH/WHEEL BASE	2 625
T_4	TRACK/WHEEL DISTANCE TO REAR WALL	720
U_1	WHEEL/TRACK GAUGE	2 076
U_2	TRACK PAD WIDTH/WHEEL WIDTH	340
W_1	WIDTH OF WALKWAY	305
W_2	HEIGHT OF WALKWAY	434

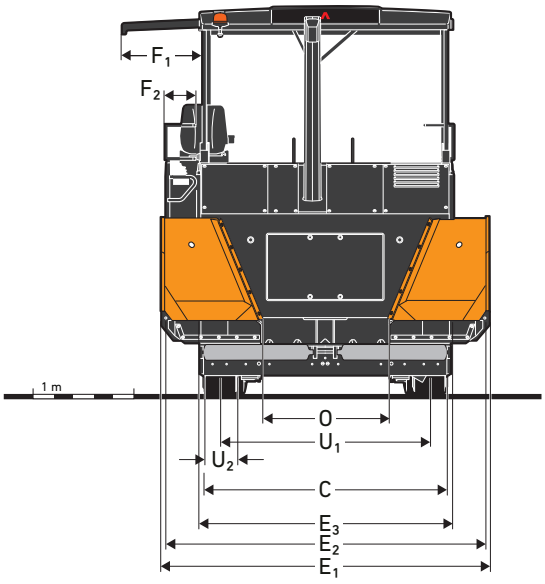

AMMANN

EQUIPMENT

STANDARD EQUIPMENT

Engine

- Volvo (Deutz) Diesel engine, China 4

Drive

- Electronic drive control
- Independent rear wheel drives
- Driven front axle 2x4
- Hydraulic ride levelers
- Load dependent efficient drive system
- Active steering
- Rear wheels with ballast

Material Management

- Heavy push rollers
- Proportional conveyor control
- Proportional ultrasonic auger control
- Four individual hydrostatic drives for conveyors and augers
- Reversible direction of auger rotation
- Hydraulic auger height adjustment

Electrics and electronics

- Electronic Paver Management (EPM 3)
- Back-lit controls
- ECO mode adaptive
- Settings Manager
- Service Interval Manager
- Steering angle indication
- Head of material indication
- Adjustable and slidable control station
- Two adjustable and revolving screed control panels
- Battery master switch
- Electric switch cabinet
- Back-up alarm
- Fuel theft detection
- Tool kit
- MATRIS support

Structure

- Manual folding all-weather roof Glass-fibre Reinforced Plastic (GRP)
- Two seats, laterally extendable
- Integrated vandalism protection
- Near field mirrors at weather roof
- ABG Key
- Storage compartments under both seats
- Cup holder
- USB charging sockets

Screed

- Split towing arms
- Screed lock
- Hydraulic crown adjustment VB screeds
- 24 V sockets at screed distribution box

Lights

- Operator's platform lighting
- Home light function
- Lamp levelling scale LED

Environmental

- Sound insulation for engine compartment and operator station

OPTIONAL EQUIPMENT

Drive

- Driven front axle 4x4

Material Management

- Heavy duty auger
- Soft Dock
- Smart Dock
- Individually operating hopper wings
- Hydraulically operated front apron
- Protective half shells for auger shaft
- Auger extensions and additional auger bearings
- Heavy duty conveyor cover
- Reversible conveyor
- Central lubrication

Electrics and electronics

- Integrated levelling
- Four 230 V power sockets
- Lateral emergency stop
- Traction isolator switch
- CareTrack, GSM installation
- CareTrack, Satellite installation
- Pave Assist (Co-Pilot system)
- Smart View camera system
- Levelling equipment
- Transport case for EPM 3 control panels

Structure

- Electrohydraulic powered weather roof
- Deluxe seats with heating
- Front windscreen incl. wiper and washer system
- Tarpaulin side curtains for weather roof
- Custom colours
- Front ballast weight

Screed

- Screed assist
- Screed tensioning device
- Screed spacer blocks
- Hydraulic height adjustment of extendable screed
- Special profiles VB 79, VB 89
- Hydraulically adjustable Power-Float screed end gates
- Heatable screed end gate

Lights

- Basic Kit Halogen
- Basic Kit LED
- Work Plus Kit LED
- Full Night Kit LED
- Warning beacons LED
- Two balloon lights LED
- Road travel lighting left-hand traffic
- Road travel lighting right-hand traffic

Environmental

- Extractor for bituminous fumes
- Emulsion spraying system incl. hose reel
- High performance spray cleaning unit
- Biodegradable hydraulic oil

For additional product information and services please visit: **www.ammann.com**
Materials and specification data are subject to change without notice.
MSS-3200-00-EN | © Ammann Group

AMMANN