ABG 6720L

ASPHALT PAVERS TRACKED

CHINA 4



Built to perform

- Powertrain components are perfectly harmonised for high efficiency
- Efficient cooling system with hydraulically powered adaptive cooling fan
- A variety of features support a faultless finish, e.g., automatic track tensioning, screed load, screed tensioning device
- Adaptive Eco Mode matches engine output to demand
- Extra-long hopper for extra-large trucks

Superb screeds

- Range of industry-leading screeds up to 9-meter paving width
- Quickly add or remove Variomatic screed extensions with the quick-coupling system*
- Simple assembly of weight optimised guide plates by one person
- Dual heating bar arrangement ensures uniform heat distribution over the entire screed
- Hydraulic screed crown adjustment to easily match the desired road profile

Total control

- EPM3 with intuitive layout and a jog-wheel for quick function settings
- Consistent, high-quality paving; transfer data from job-to-job with the Settings Manager
- Illuminated and clearly laid out screed control panels
- Hydraulic auger height and screed crown adjustment
- Unhampered visibility around the paver

Keep on working

- Service access from the platform provides ease of maintenance
- Service Interval Manager notifies the operator of required maintenance
- Automatic greasing system
- Maintain productivity and machine uptime with approved Genuine ABG Parts

**AN ABG EXCLUSIVE FEATURE*

AMMANN

ABG 6720L

China 4

ENGINE		ABG 6720L
MANUFACTURER		Volvo (Deutz)
MODEL		D6J
FUEL		Diesel
OUTPUT	kW	140
	hp	190
AT ENGINE SPEED	r/min	2 000
COOLANT		Liquid
FUEL TANK CAPACITY	l	250
EXHAUST EMISSION		China 4

PAVING		
OUTPUT (THEORETICAL)*	t/h	700
MAT THICKNESS (MAX)	mm	300

**The actual paving output depends upon the mat thickness, the paving width and paving speed and will vary according to paving conditions prevailing on your jobsite.*

SPEED		
PAVING (MAX)	m/min	20
TRANSPORT (MAX)	km/h	3.3

UNDERCARRIAGE		
LENGTH	mm	3 000
WIDTH (TRACK PLATES)	mm	300

CONVEYOR		
HOPPER CAPACITY	t	15.5
NUMBER OF CONVEYORS		2
CONVEYOR SPEED (MAX)	m/min	21

AUGER		
NUMBER OF AUGERS		2
SPEED (MAX)	1/min	95
DIAMETER	mm	360

DIMENSIONS		ABG 6720L
LENGTH WITH VARIO SCREED (WALKWAY UP)	mm	6 452
WIDTH	mm	2 548
HEIGHT	mm	3 780
HEIGHT (TRANSPORT)	mm	2 910

WEIGHT		
TRACTOR UNIT	kg	14 730

All weights are approx. weights without options.
Weight of tractor without screed, with standard hopper, with fuel tank half full, with towing arms separated, with push roller D=160 mm, and incl. 75 kg driver.

MAX. ALLOWABLE GRADEABILITY		
TRACTOR UNIT + SCREED	%	25

Applies to screed VB 78 2.5–5.0 m.
When using extensions the max. allowable gradeability will be reduced.

VIBRATION		
HAND-ARM VIBRATION *according to ISO 5349:2001*	m/s^2	<2.5
WHOLE BODY VIBRATION *according to ISO 2631:1997*	m/s^2	<0.5

ELECTRICAL SYSTEM		
BATTERY VOLTAGE	V	24

OPERATING WEIGHTS[1] OF SCREEDS IN KG[2] AT WORKING WIDTH

ABG 6720L	2.5 m	4 m	5 m	6 m	6.5 m	7 m	7.5 m	8 m	8.5 m	9 m
VB 78 ETC	-	-	3 600	-	5 222	-	5 802	6 342	-	6 923
VB 88 ETC	-	-	-	4 050	-	-	5 772	-	6 352	6 892
MB 122 ETC	2 242	-	-	4 456	-	-	6 076	-	-	6 828

[1] *Including auger extensions, channel plates, end gates, towing arms rear, etc.*
[2] *All screeds electrically heated*

TRACKED ASPHALT PAVERS

DIMENSIONS [mm]		ABG 6720L
A		6 702
B_2		3 783
B_3		2 916
C		2 548
D_1		2 624
D_2		1 613
D_3		987
E_1		3 257
E_2		3 176
E_3		2 495
G_1		525
G_2		597
H_1		2 656
H_2		2 505
J_1		265
J_2		259
J_3		932
K_1		356
K_2		360
N		160
O		1 325
S_1	VB 78	2 500
	VB 88	3 000
S_2	VB 78	5 000
	VB 88	6 000
T_1		1 233
T_3		3 000
T_4		408
U_1		1 969
U_2		301
W_1		315
W_2		434

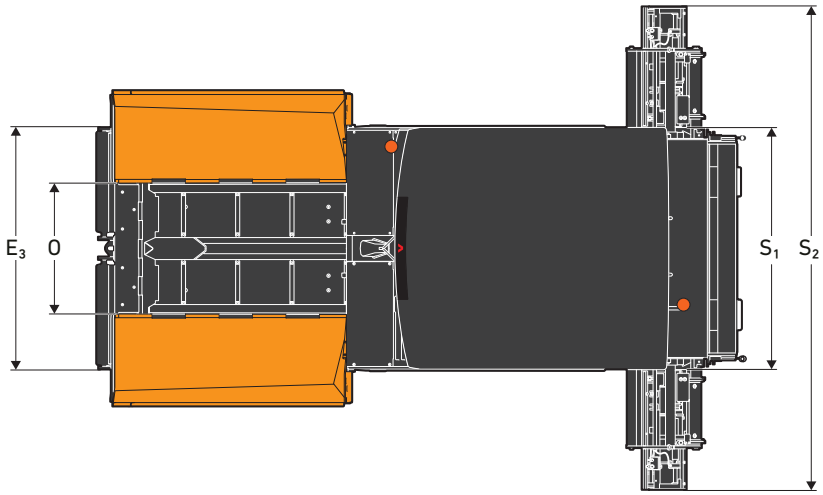

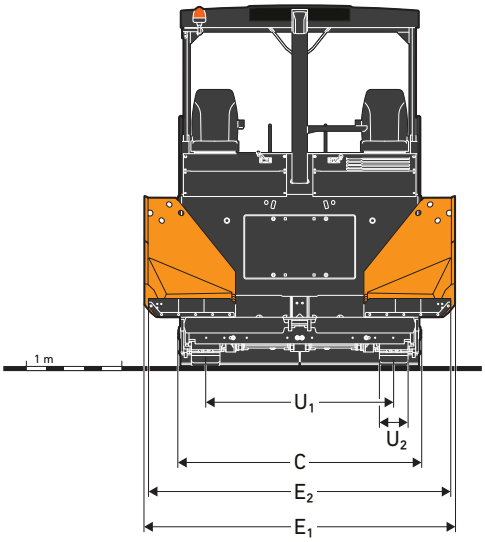

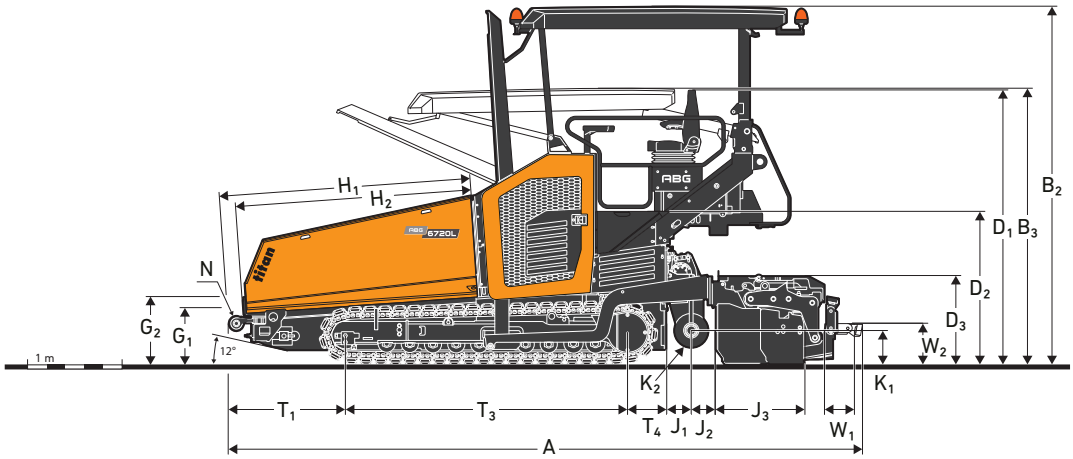

AMMANN

EQUIPMENT

STANDARD EQUIPMENT

Engine

- Volvo (Deutz) Diesel engine, China 4

Drive

- Electronic drive control
- Lifetime lubricated crawler track rollers
- Forged and hardened crawler track links
- Automatic track tensioner

Material management

- Standard long hopper
- 160 mm push roller
- Analog conveyor sensors
- Four individual hydrostatic drives for conveyors and augers
- Reversible conveyor
- Reversible direction of auger rotation
- Standard Auger 9 m
- Manual auger height adjustment
- Proportional ultrasonic sensor auger control
- Central lubrication

Electrics and electronics

- Electronic Paver Management (EPM 3) Main Control Panel
- Set of Basic Screed control Units
- ECO mode
- Settings Manager
- Service Interval Manager
- Battery master switch
- Electric switch cabinet
- PSR telematics
- MATRIS
- Generator for electric screed heating

Structure

- All-weather roof of GRP (glass-fibre reinforced plastic)
- Manual roof pump
- Adjustable and revolving main control panel at operator platform
- Two screed control panels
- Two standard seats
- Storage space below seats
- Anti-vandalism kit
- Near field mirrors at weather roof
- ABG Key

Screed

- Split towing arms
- Screed lock
- Quick coupling system for vario screeds
- Hydraulic crown adjustment vario screeds

Lights

- Work Light kit Halogen

Environmental

- Sound insulation

OPTIONAL EQUIPMENT

Material management

- Individually operated hopper wings
- Auger extensions and additional auger bearings
- Hydraulic auger height adjustment

Electrics and electronics

- Levelling Equipment
- High ambient temperature fan

Screed

- Screed assist
- Screed anti-climbing lock
- Screed load device
- Screed tensioning device
- Spacer Blocks 56 mm

Lights

- Warning beacons Halogen

Environmental

- High performance spray cleaning unit

MSS-3207-00-EN | © Ammann Group

AMMANN